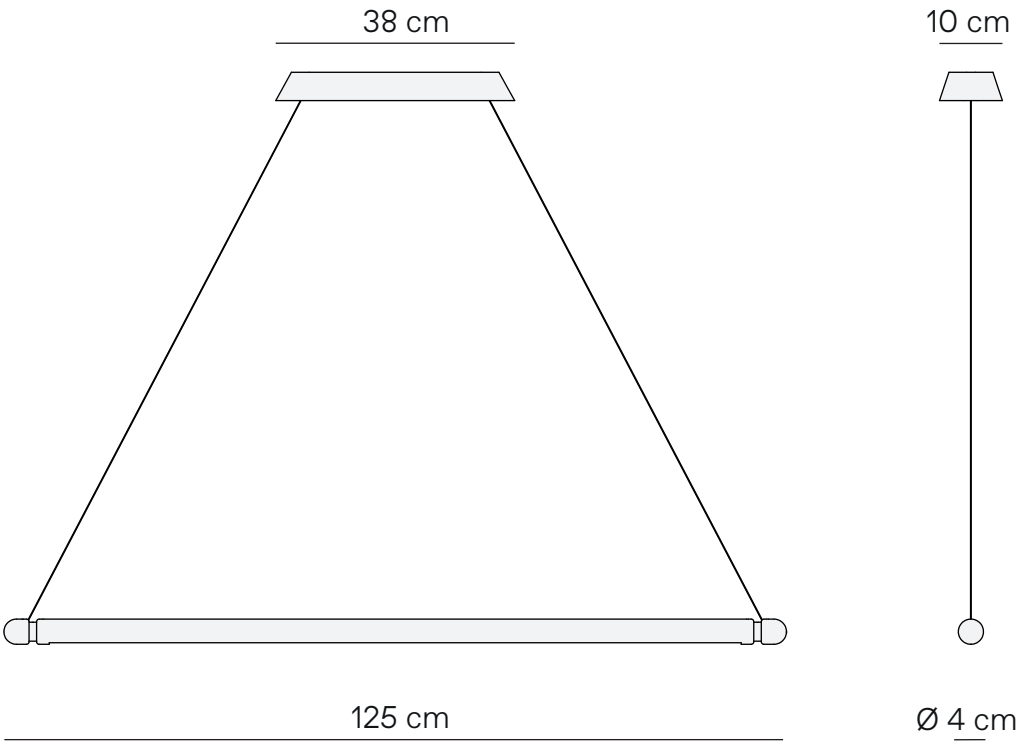
38 cm
10 cm
125 cm
Ø 4 cm