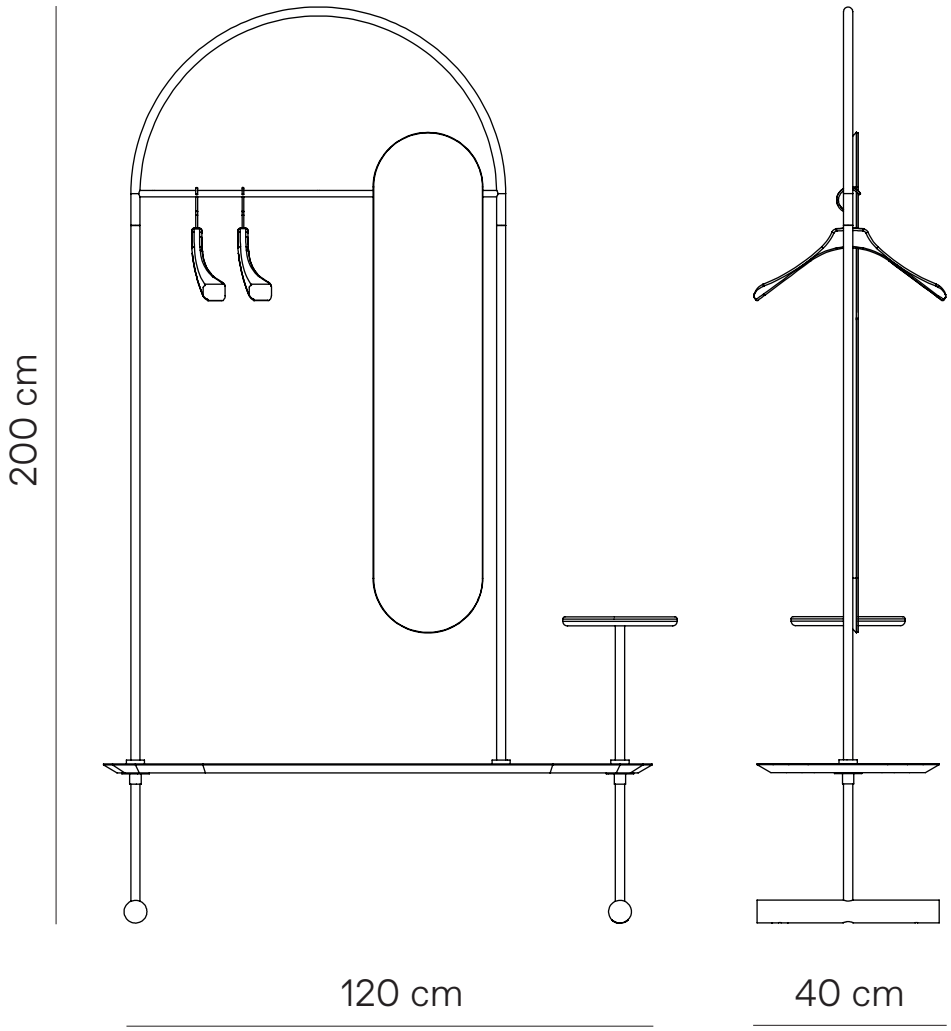
200 cm
120 cm
40 cm